FLOW DIVIDER VALVE ·FDT3-**-**G TYPE	Gasket mounting	29.4 MPa
DE CO VALVE ·TDCV3-**-**G TYPE		

・Dimensions (FDT3-03,04/TDCV3-03,04)

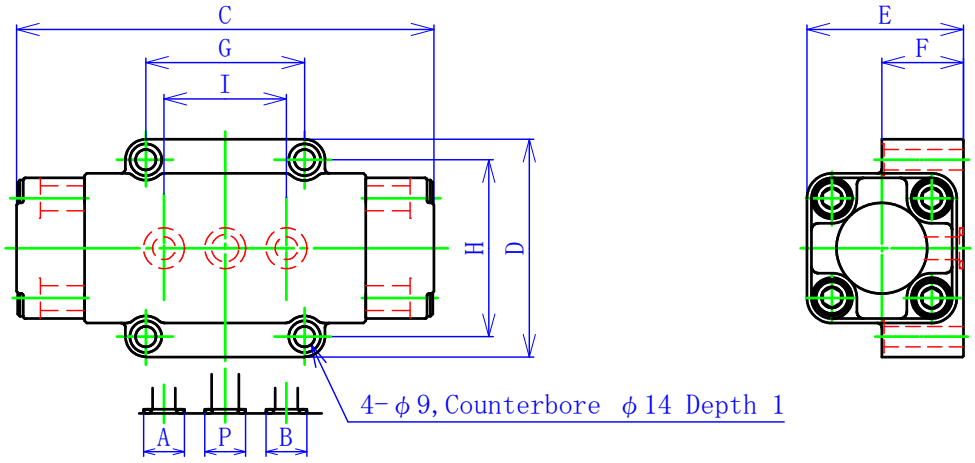

・Dimensions (FDT3-08,12/TDCV3-08,12)

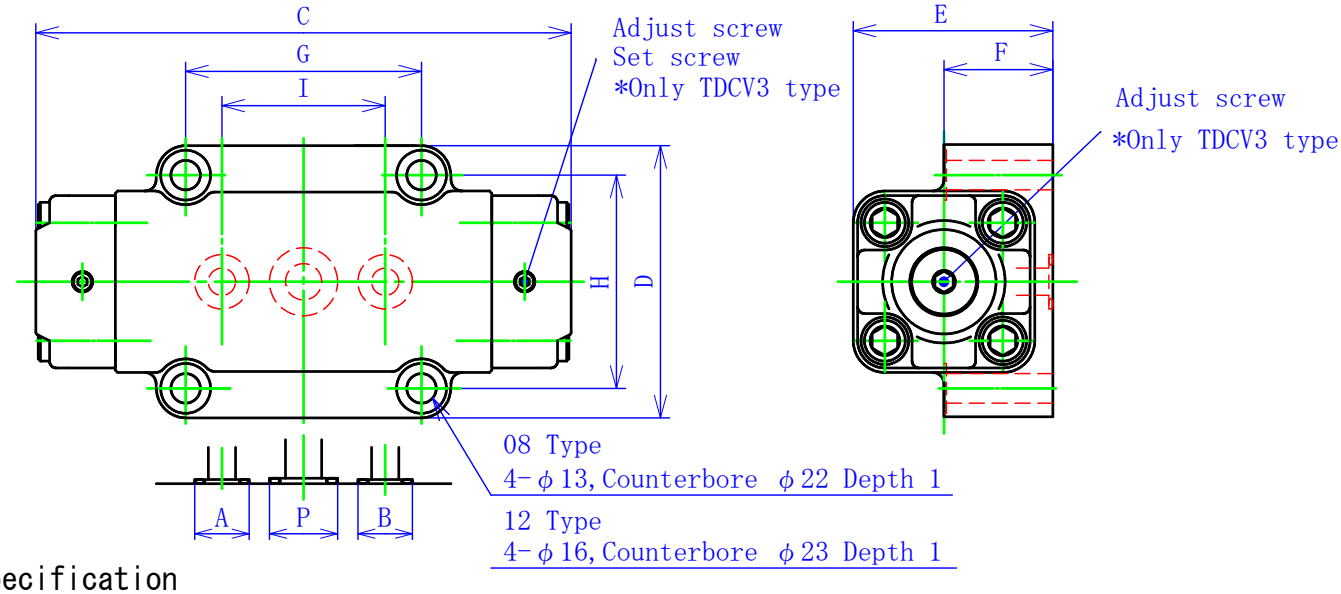

・Specification

Type			Port P Standard flow (l/min.)	Port P Flow range (l/min.)	Pressure loss (MPa)	Connecting pipe P	Connecting pipe A・B	C	D	E	F	G	H	I	Weight (kg)
FDT3 TDCV3	03	4 G	4	3 ~ 5	±0.3 0.7	φ18	φ18	184	96	69	36	70	78	54	5.3
		6 G	6	5 ~ 8											
		10 G	10	8 ~ 13											
		15 G	15	13 ~ 18											
		20 G	20	17 ~ 25											
	04	30 G	30	25 ~ 36		φ22	φ18								
		40 G	40	33 ~ 48											
	08	50 G	50	42 ~ 60		φ30	φ24	236	120	88	48	104	94	72	11.5
		60 G	60	50 ~ 72											
		80 G	80	67 ~ 95											
		100 G	100	85 ~ 120											
	12	120 G	120	100 ~ 145		φ40	φ30	298	150	110	60	130	122	96	22
		160 G	160	135 ~ 195											
		200 G	200	165 ~ 240											
		240 G	240	200 ~ 290											
		300 G	300	260 ~ 350											